BYİBA
LIGHT

INSTALLATION INSTRUCTION

BOKU

INSTALLATION TYPE:
WALL MOUNTED

G9 110-120V IP20

08/11/2025

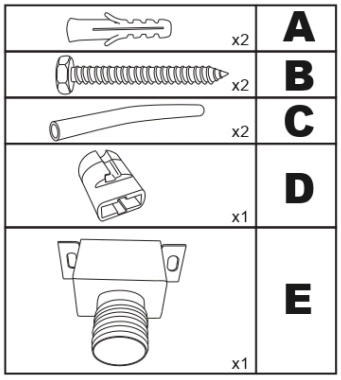

				025.292 (REV04) MADE IN ITALY	2336 2350 2450
G9 33W 240V			IP 20		

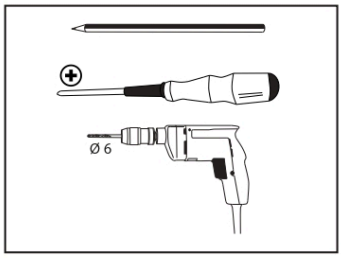

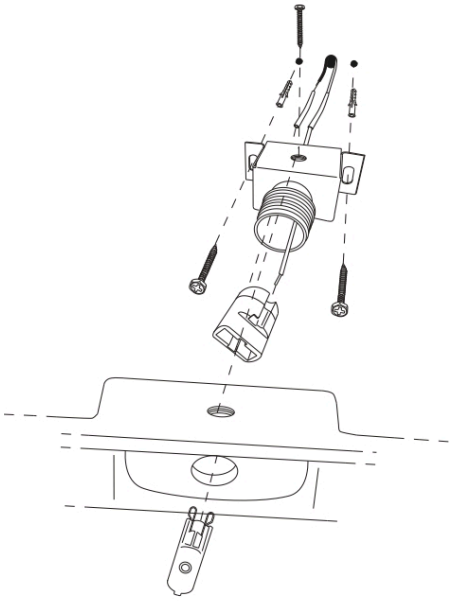

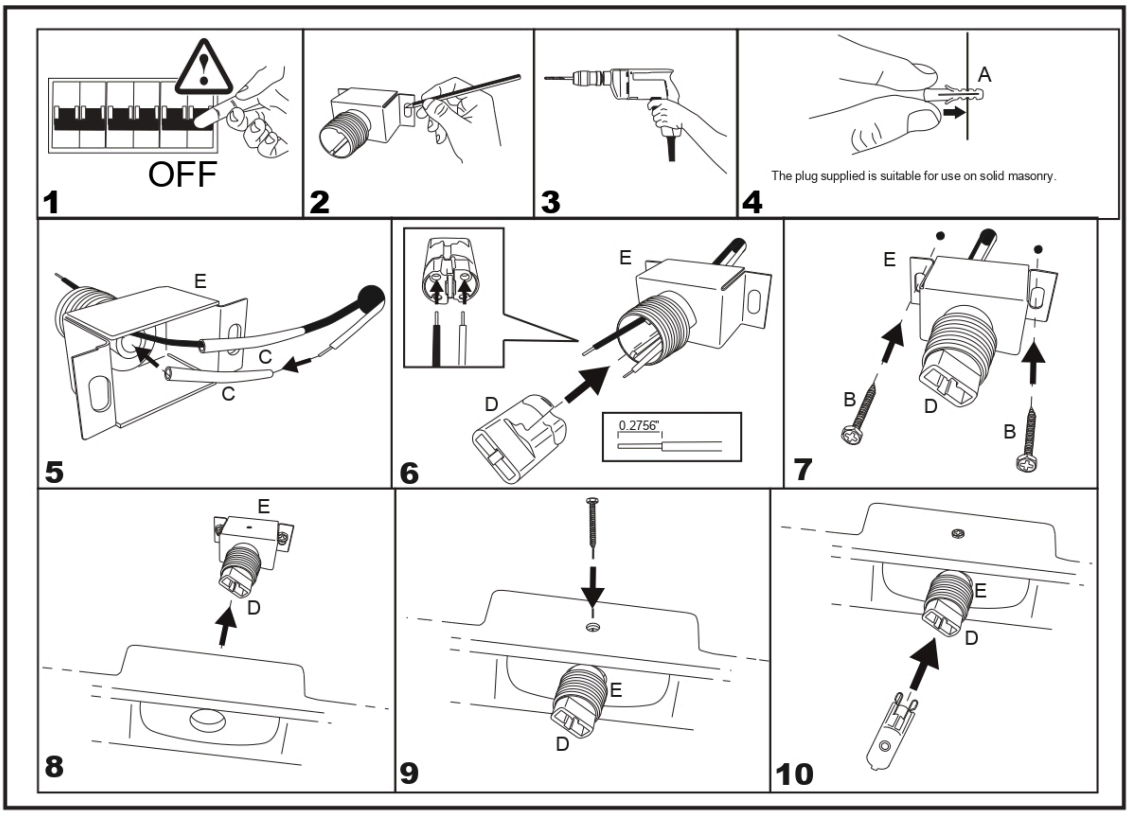

sales@gordonbullard.com
www.byiba.com
1 877-964-4646

991 South Gull Lake Dr.
Richland, MI 49083
USA

Due to the dynamic nature of lighting products and the associated technologies, luminaire data on all specification sheets is subject to change at the discretion of Gordon Bullard LLC and associated companies.

© Bullard & Comany 2025 All Rights Reserved